Digital Inclusion Requires a Business Model Too

7 July 2020

Anna Bon, Jaap Gordijn, Cheah Wai Shiang

Paper presentation at the
Web Science DigDivDigHum-20 Workshop

Is Digital Inclusion Sustainable?

- Digital services that should serve unconnected groups and bridge the Digital Divide often do not survive the (donor-funded) pilot period.
- Despite a general consensus that this problem exists, no methods are in use to evaluate economic sustainability of digital development projects ex-ante, i.e. before deployment.
- In this study we assess the use of the *e^3 value method* for analysis of ***economic sustainability*** of Digital Development projects in low resource environments.

Context of this research: poor suburban communities near Kuching, Sarawak, Malaysia

- Three student projects in a master course by VU and UNIMAS "ICT4D in the Field" – community service learning & ICT4D – one month project
- Developing ICT systems for communities in a low resource context in Sarawak Malaysia

Methodology used in ICT4D in the Field to develop IS for low-resource contexts

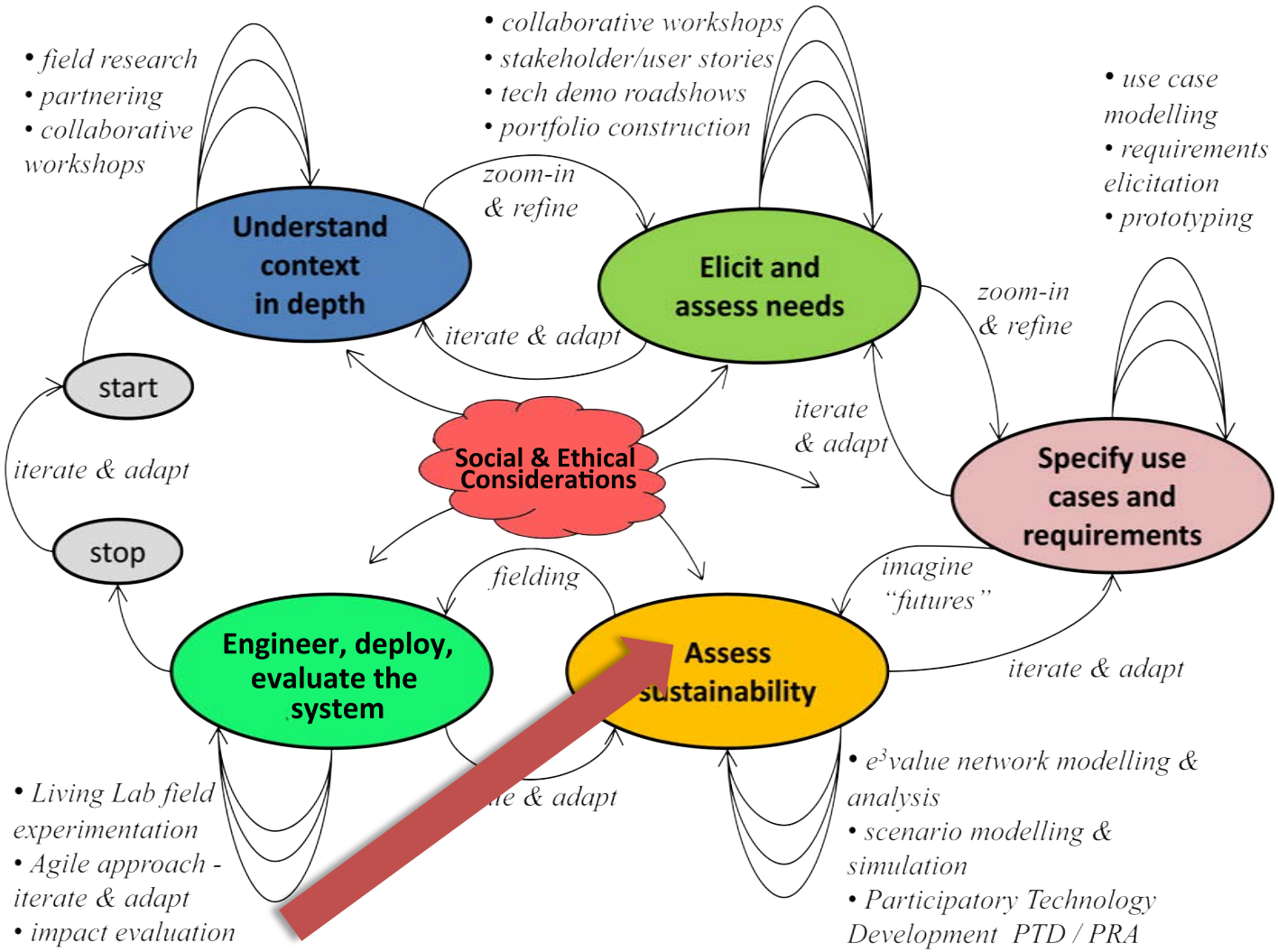

The e³ value method in a nutshell

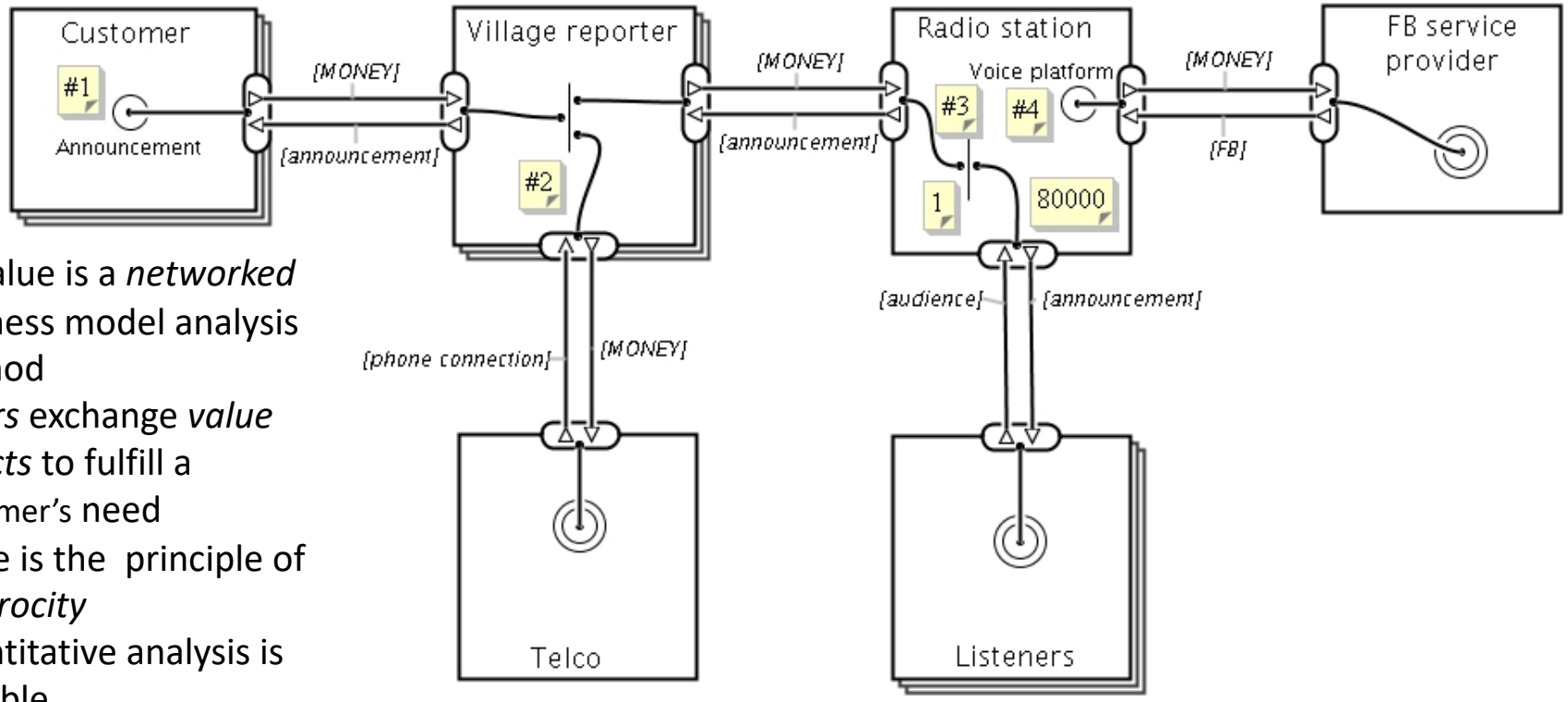

- e³ value is a *networked* business model analysis method
- *Actors* exchange *value objects* to fulfill a customer's need
- There is the principle of *reciprocity*
- Quantitative analysis is possible
- Allows to make scenarios
- Allows to predict economic sustainability
- Makes it possible to discuss interests, dependencies and power structures in the network.

(this is an example of a e³value model of a local business network in a project in Mali)

Questions in this study

- Is the e^3 value method useful for sustainability analysis in Digital Development projects?
  - Can it predict sustainability of envisaged solutions and does it inform decision making in a digital development project ?
  - Is it easy to learn, does it provide insight in the ecosystem and does it encourage system thinking?

Three use cases in Sarawak 2018, 2019

- Appong Project
- BannaTree project
- Majunet project





These are three master student projects in Sarawak: course by VU & UNIMAS
Aim is to design/build/test pilot system in a user-centered way
To improve local livelihoods.
Projects must fit existing local initiatives, e.g. of local government

Appong project, 2018

- Gula appong is traditional home-made sugar from the Nipah palmtree, near Kuching
- Small family producers work in the mangroves
- Produce a few kg per day
- Difficulty to find customers
- Farmers' work is environmentally important for protection of mangrove forests



Appong project: a webshop for Gula Apong producers

Questions for the analysis

Who are the local stakeholders?
What are their operational goals?
Sketch the model
What are the estimates volumes?
What are the estimated net revenues?
Alternative scenarios?
Risks?
Dependencies?
In which scenario do all actors create value?

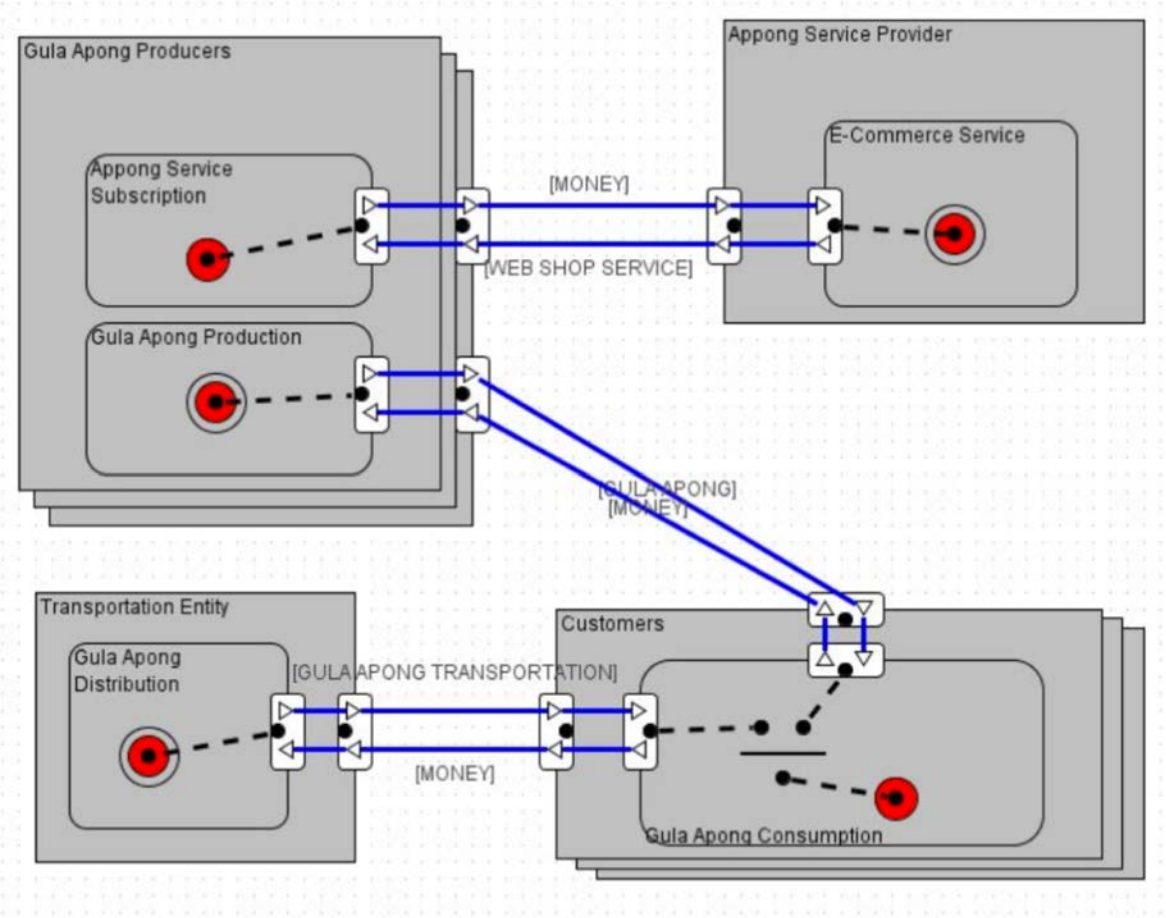

Majunet project 2019

- Government of Sarawak wants to promote jobs for women in the kampungs (suburban communities near Kuching, capital of Sarawak)
- It subsidizes set up of small firms for e.g. packaging of traditional products
- Information system is required to increase efficiency.
- Is this business sustainable without support?

Case 3: Majunet project

Questions for the analysis
Who are the stakeholders?
What are their operational goals?
What are the expected volumes, costs?
Calculate scenarion with and without governmental Support.
If wages are provided, calculate business plan for the WI business.
Are all data about cost open to design
The model ?
Will the business work without external support? At what volumes?

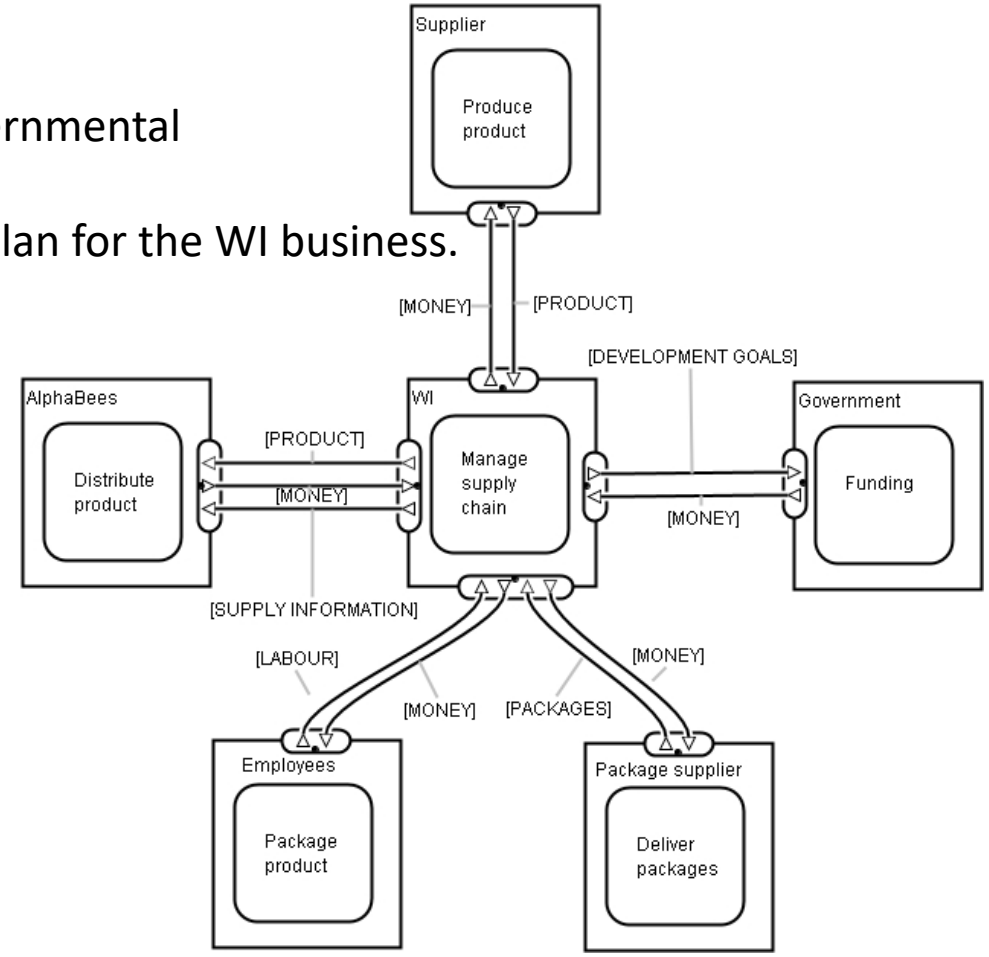

BannaTree project 2018

- The government in Sarawak wants to help contract farmers to have better revenues while supporting small industry
- Actors: Banana chip factory, contract farmers, government, customers
- Project idea: information system will (i) improve efficiency of logistics between farmers and factory, and (ii) provide data about banana production to the government.

Scenario 1: BannaTree project
To improve efficiency and communication

Questions for the analysis
Who are the stakeholders?
What are their operational goals?
Are they independent?
What is the role of the IS?
How will that influence the Income of the farmers?

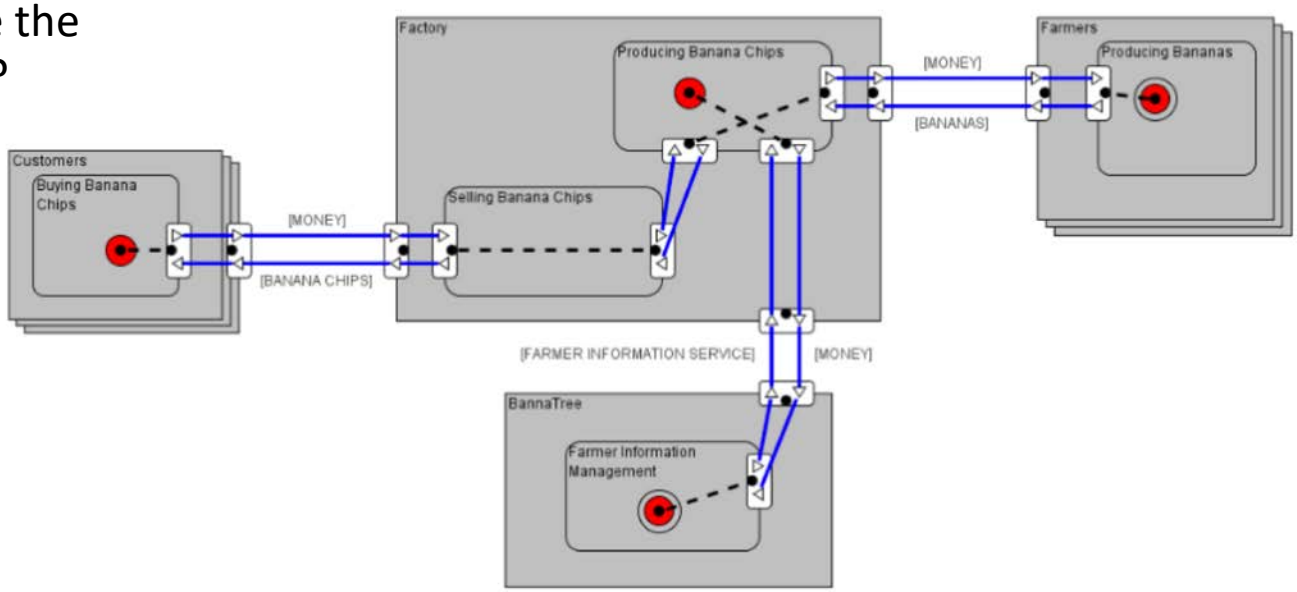

Scenario 2: BannaTree project
To improve efficiency and provide production data of bananas

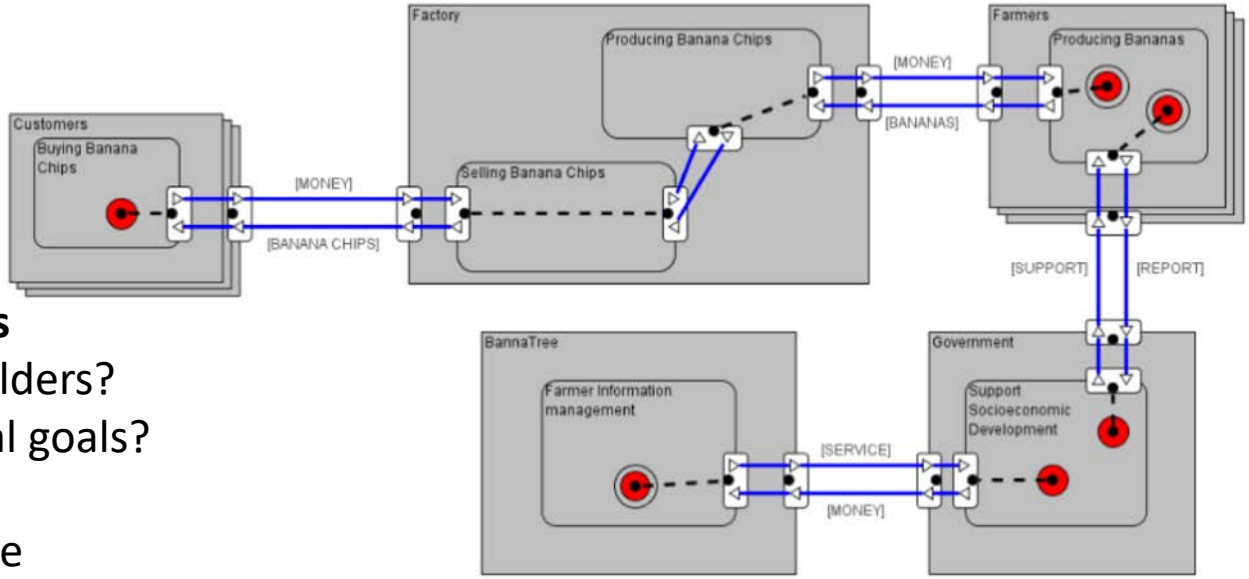

Questions for the analysis

Who are now the stakeholders?
What are their operational goals?
What is the role of the IS?
How will that influence the income of the farmers?
Is the system sustainable?
Does it create value for the stakeholders?

Conclusion:The case studies in Sarawak with students from VU and UNIMAS have shown:

- e^3 value method is easy to learn, provides visual conceptualization of a value network.
- Provides insight to developers of information systems beyond e.g. the technical system or interface design.
- Allows to assess stakeholder goals and detect conflicting interests and consider alterative scenarios.
- Shows strengths and weaknesses in the business network, wrt interests/revenues.
- Can inform decision-making about the business.
- Encourages eco-system thinking and discussion/deliberation.